Direct Read Cable

When it is desired to get real-time data and communicate with Leveloggers, without removal from the water, they should be deployed using Direct Read Cables. This allows viewing of the data, downloading and/or programming in the field using a portable computer with PC Interface Cable, DataGrabber, or the Solinst Levelogger App and Interface.

Direct Read Cables are available for attachment to any Levelogger in lengths up to 1500 ft. The 1/8" dia. (3.175 mm) coaxial cable has an outer yellow polyurethane jacket that is abrasion resistant. The stranded stainless steel conductor gives non-stretch accuracy, strength and durability.

The Direct Read cable threads onto the Levelogger, while the socket at the opposite end of the Direct Read Cable fits into the specially designed Well Cap insert (see Figure 1), to allow for easy field installation in wells.

To connect and suspend a Levelogger from a Direct Read Cable

- Remove the installation cap from the Levelogger, align and connect the optical socket (two glass 'eyes' using the alignment pin) of the Direct Read cable to the Levelogger by threading the coupling onto the Levelogger tightly.

To communicate with a Levelogger via a Direct Read Cable

- Remove the protective cap from the non-optical socket of the Direct Read Cable, and align and thread it to the PC Interface Cable (see Figure 2), Levelogger App Interface or DataGrabber (Figure 3).

NOTE:

- When removing a Direct Read Cable from a Levelogger, ensure you only twist the coupling. To avoid possible damage, do not twist the strain relief on the Direct Read Cable. (See Figures 4a & 4b)

Figure 1

Figure 2

Figure 3

For further information contact: Solinst Canada Ltd.
Fax: +1 (905) 873-1992; (800) 516-9081 Tel: +1 (905) 873-2255; (800) 661-2023
35 Todd Road, Georgetown, Ontario Canada L7G 4R8
Web Site: www.solinst.com E-mail: instruments@solinst.com

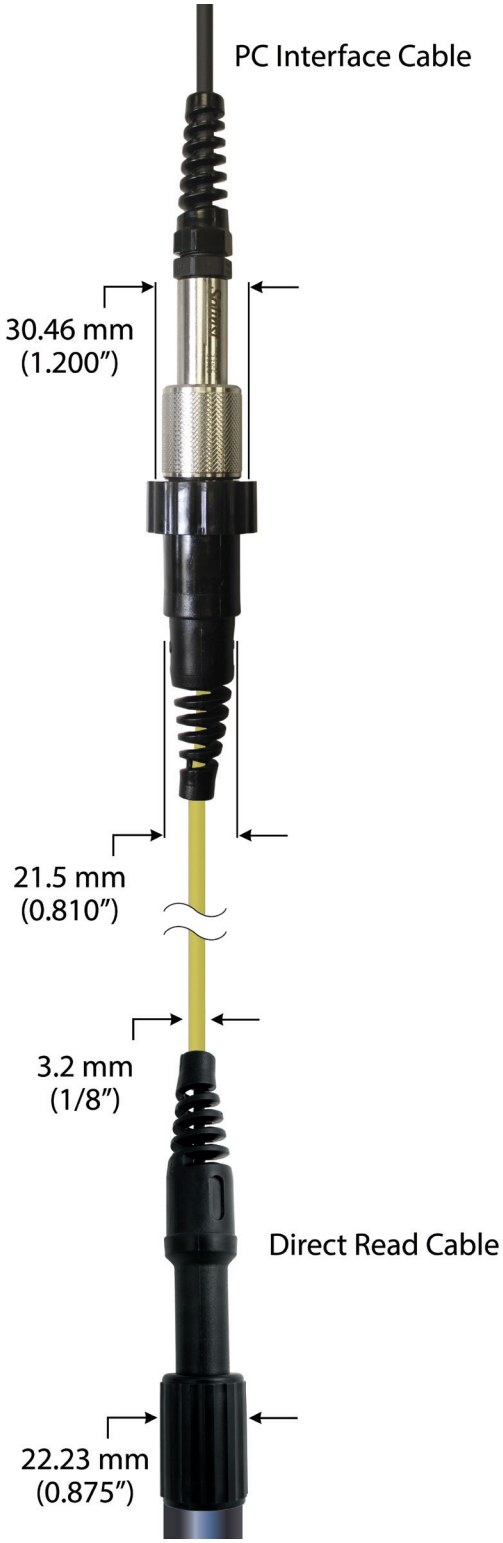

Figure 4a

Figure 4b

For further information contact: Solinst Canada Ltd.
Fax: +1 (905) 873-1992; (800) 516-9081 Tel: +1 (905) 873-2255; (800) 661-2023
35 Todd Road, Georgetown, Ontario Canada L7G 4R8
Web Site: www.solinst.com E-mail: instruments@solinst.com